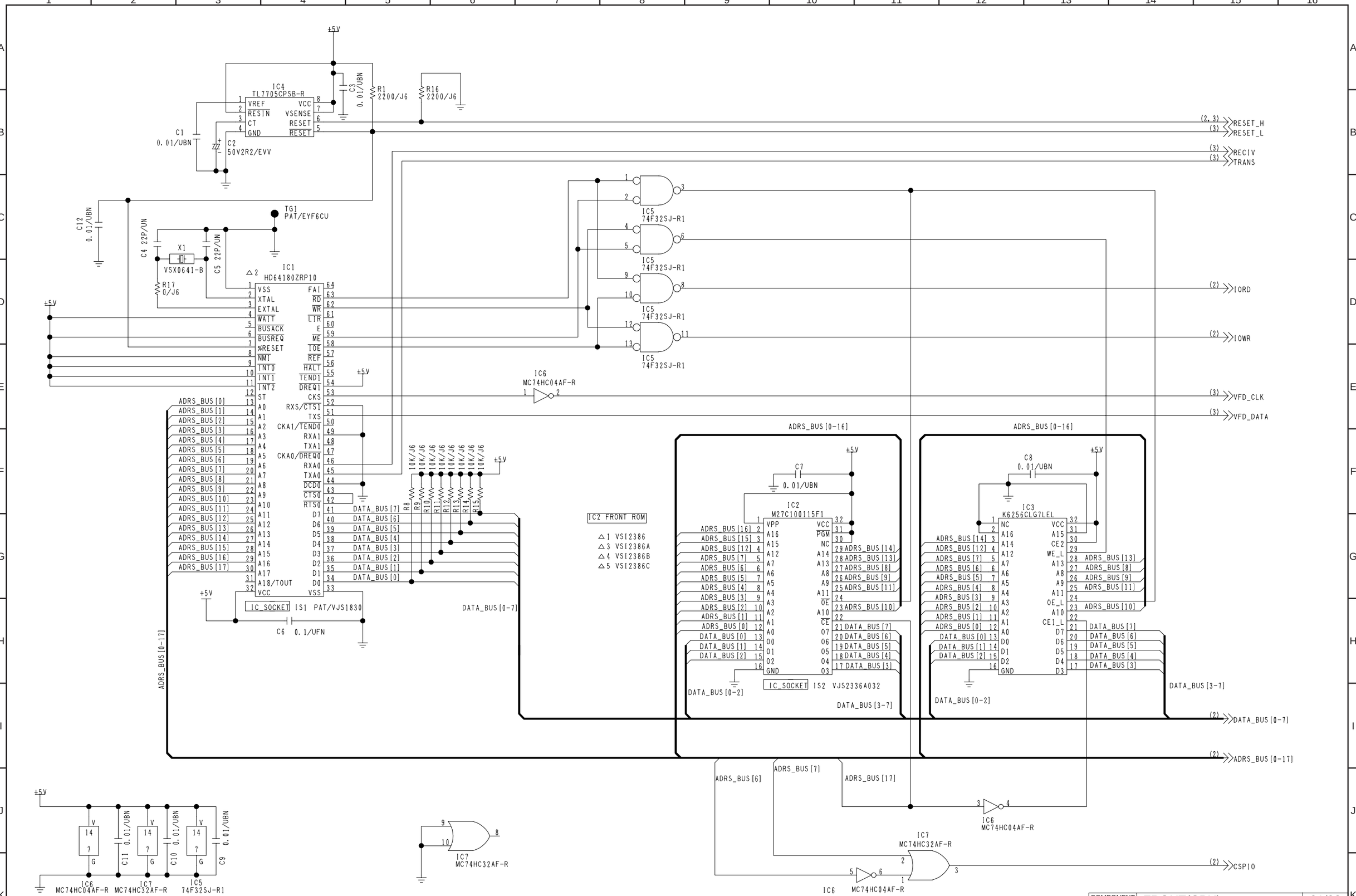

COMPONENT NAME	FRONT(CPU)	01/03
CIRCUIT BOARD NO.	COMPONENT PATH	
VEP86256A:450 VEP86256B:440		
KR2C03-1(01/03)		SCM182

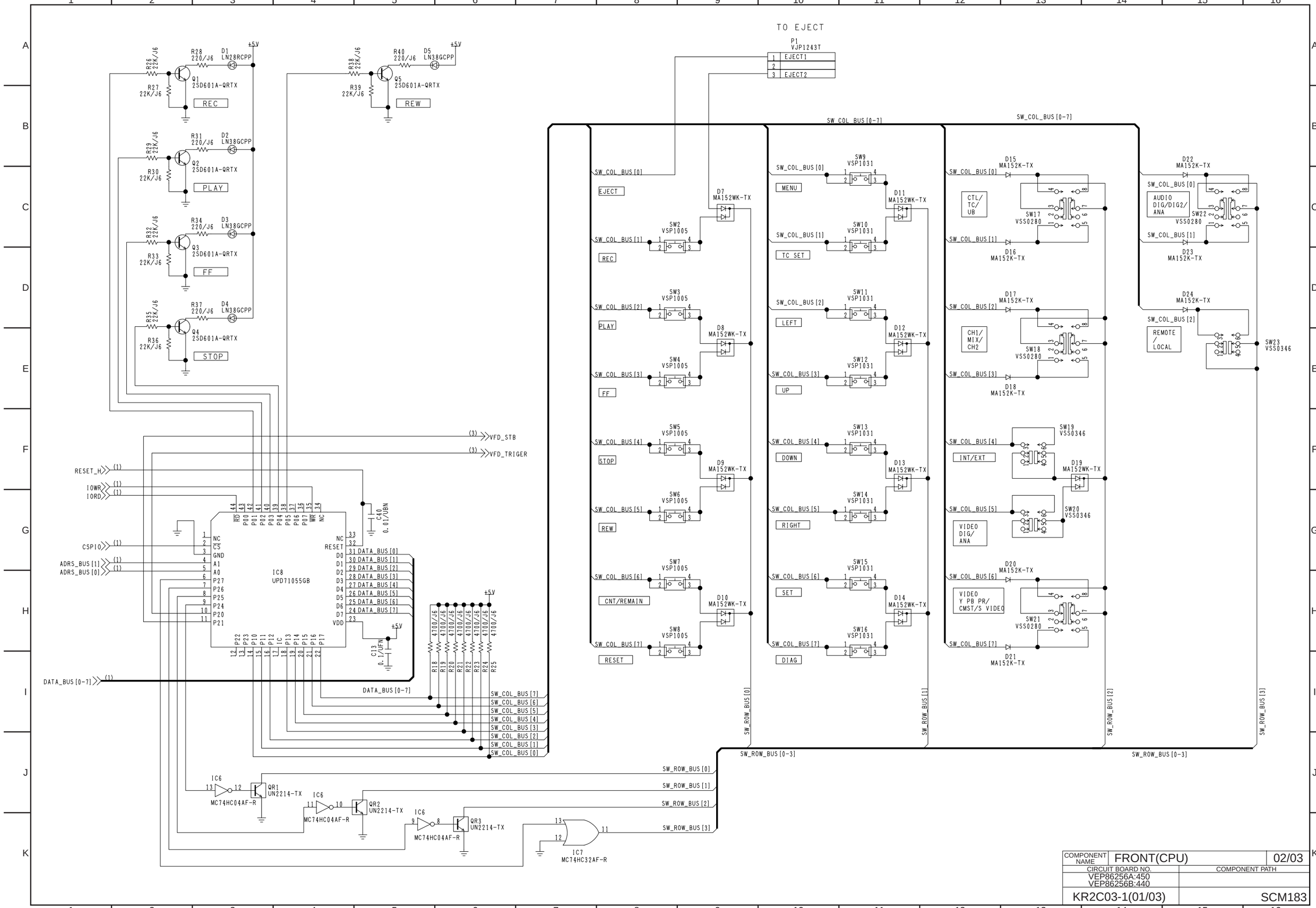
TO EJECT
P1
VJP1243T
EJECT1
EJECT2
REC
PLAY
FF
STOP
REW
IC8
UPD71055GB
VFD_STB
VFD_TRIGER
RESET_H
IOWR
IORD
CSP10
ADRS_BUS[1]
ADRS_BUS[0]
DATA_BUS[0-7]
SW_COL_BUS[0-7]
SW_ROW_BUS[0-3]
EJECT
REC
PLAY
FF
STOP
REW
CNT/REMAIN
RESET
MENU
TC SET
LEFT
UP
DOWN
RIGHT
SET
DIAG
CTL/ TC/ UB
CH1/ MIX/ CH2
INT/EXT
VIDEO DIG/ ANA
VIDEO Y PB PR/ CMST/S VIDEO
AUDIO DIG/DIG2/ ANA
REMOTE / LOCAL
MC74HC04AF-R
MC74HC32AF-R
COMPONENT NAME
FRONT(CPU)
02/03
CIRCUIT BOARD NO.
VEP86256A:450
VEP86256B:440
COMPONENT PATH
KR2C03-1(01/03)
SCM183

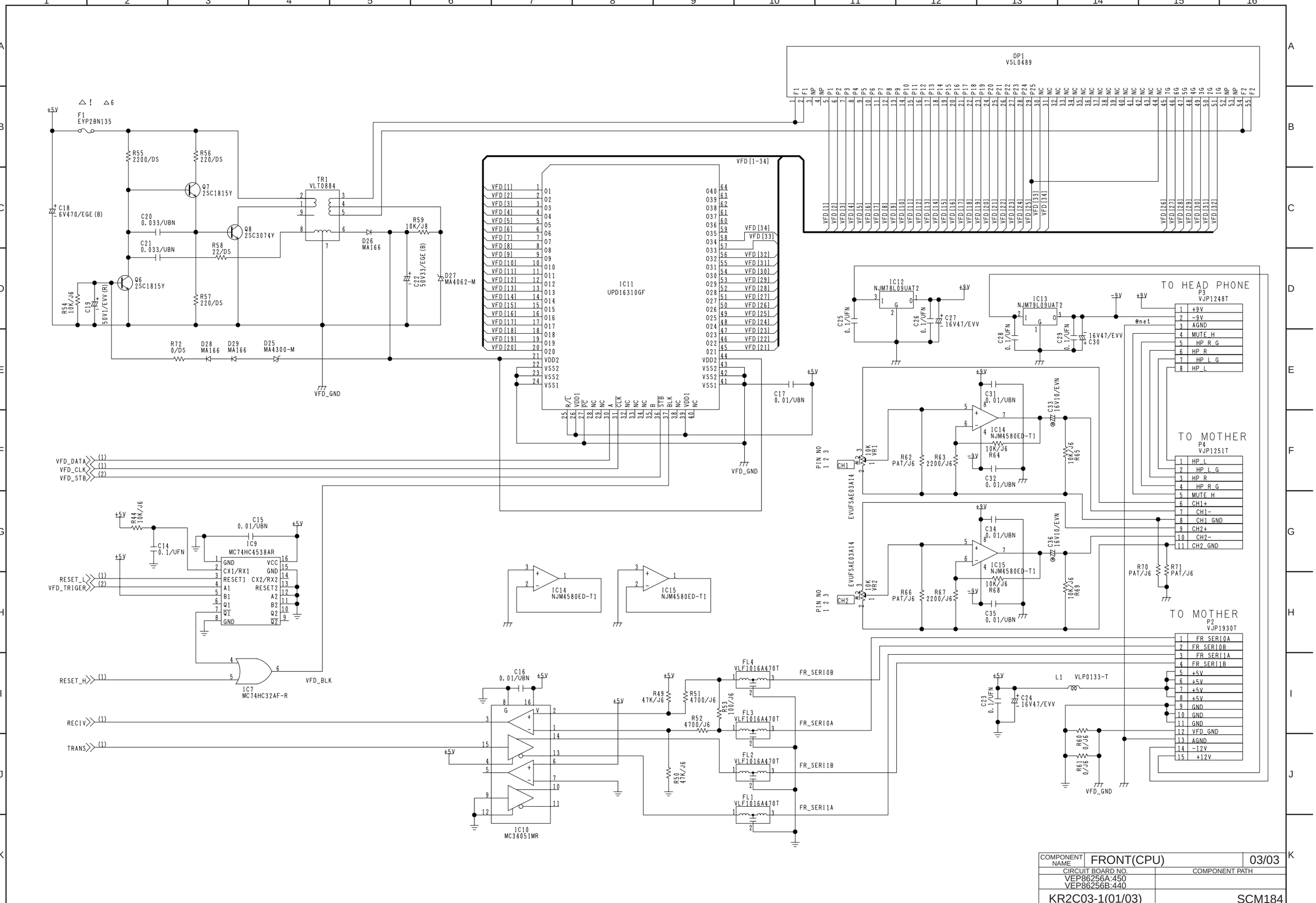

COMPONENT NAME	FRONT(CPU)	03/03
CIRCUIT BOARD NO.		COMPONENT PATH
VEP86256A:450 VEP86256B:440		
KR2C03-1(01/03)		SCM184